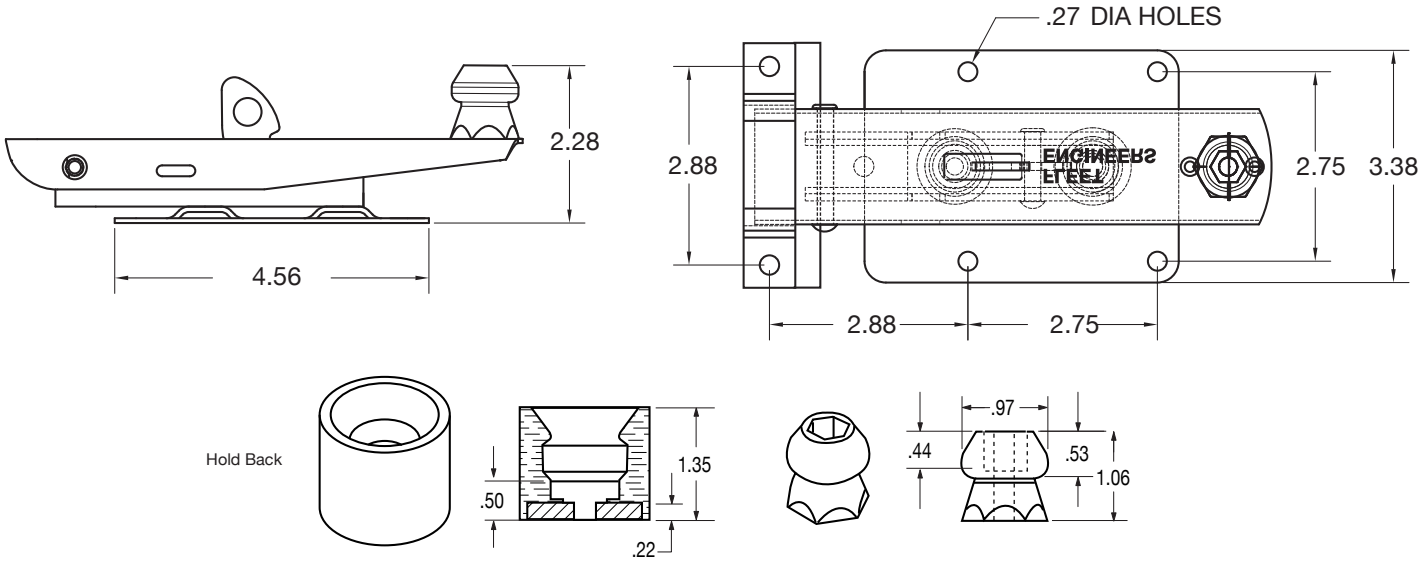

Description

Vent Door Latch Assembly & Components (New Style)

Literature Number

DD-024-03080-A-20212505

Part Numbers

024-03059
024-03060
021-00309
024-03089