PRESSURE PROTECTION VALVES

PROTECT YOUR AIR BRAKE SYSTEM!



REPLACES:
TS #51350 → Sealco #140280
TS #51351 → Sealco #140270

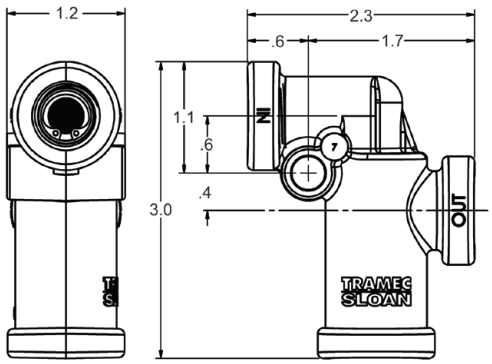

FEATURES & BENEFITS

Pressure Protection Valves are used to isolate auxiliary air systems from the brake system. They are designed to preserve air for braking in the event the auxiliary system develops a leak.

- Assembled & Individually Tested in the USA!
- Hard Anodized Finish for Superior Corrosion Resistance
- Features an Internal Check Valve
- Includes an Integrated Filter
- Same Heavy Duty Seals as the TEV
- Two 3/8"-18 NPTF Ports
- Aluminum Die-Cast Body
- Choice of Two Pressure Settings
- Brass Internal Components

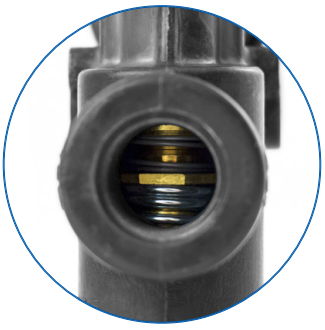

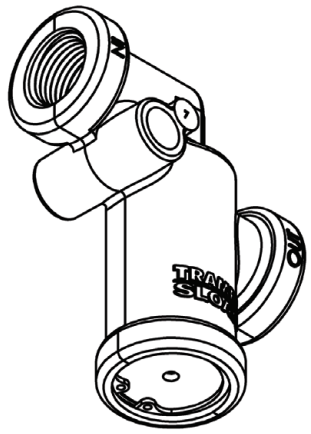

PRESSURE PROTECTION VALVES

P/N	DESCRIPTION	INLET PORT	OUTLET PORT	NOM. CLOSING PRESSURE
51350	Pressure Protection Valve	3/8"-18 NPTF	3/8"-18 NPTF	70 PSI
51351	Pressure Protection Valve	3/8"-18 NPTF	3/8"-18 NPTF	60 PSI