PRODUCT BULLETIN

EFFECTIVE IMMEDIATELY:

STANDARDIZATION OF MAIN TUBE & EXTENSION TUBE IN SL-10 SERIES CARGO BARS

Fleet Engineers has standardized the **MAIN TUBE AND EXTENSION TUBE** used across all Save-A-Load Cargo Bars. This change aligns the SL-10 light-duty cargo bars with the same sizes of material used currently used in our larger cargo bar models.



WHY THE CHANGE WAS MADE

Streamlined Production: Using a single main tube and extension tube design reduces manufacturing complexity and increases production efficiency.

Simplified Inventory: Dealers and distributors may now stock fewer replacement parts, making inventory management easier.

CUSTOMER IMPACT

- No change in product application.
- Same ease of use and consistent performance.
- No change to SL-10's light-duty classification or target vehicle compatibility.

WHAT'S CHANGING ON THE SL-10 CARGO BARS & REPLACEMENT PARTS

COMPONENT	PREVIOUS SL-10 CONFIGURATION	UPDATED CONFIGURATION
Main Tube	1.25" Square Main Tube	1.75" Square Main Tube
Hydraulic Pump	080-PI	080-PI now supplied with End Guides and Cradle to fit the larger 1.75" tube
Articulating Foot (Extension Side)	080-R028	080-R060R
Fixed Foot (Extension Side)	080-R027	080-R070
Roll Pin Hardware (Main Tube)	080-A051-50	080-A107SS-50 (Stainless Steel) 080-A107-50 (Zinc)
Roll Pin Hardware (Foot)	080-A050-50	080-A091-50
End Guide Assembly	080-R021	080-R022
Hoops	Connection hardware only for the 1.25" square tube	Connection hardware for 1.75" square tube will be include with all SL-10 hoops

See backside for a complete list of Save-A-Load Part numbers affected.

SL-10 LIGHT DUTY PRESSURE CALIBRATION

Although the main tube and extension tubes are now standardized, the pressure-limiting valve in SL-10 light-duty bars remains precisely set to a PSI level engineered for secure use in everyday pickups, vans, and SUVs.

- Holds firmly in place during transport
- Designed to prevent over-pressurization
- Will not damage vehicle walls
- Now includes new end guides/cradle to support a larger tube size



PUMP NOW INCLUDES NEW CRADLE AND END GUIDES TO FIT IN A LARGER MAINTUBE

PRODUCT BULLETIN

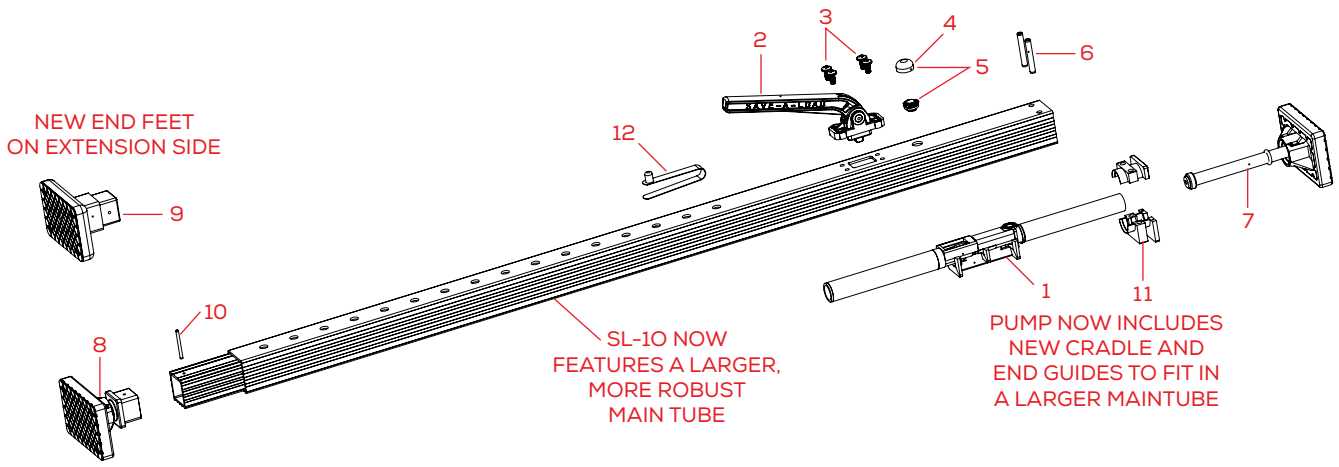

#	PART NUMBER	DESCRIPTION
1	080-PI	Hydraulic System for SL-10 Cargo Bars with Cradle & End Guide
2	080-R131	Pump Handle Assembly
3	080-A145-100	Bracket Screw (Zinc)
	080-A145SS-100	Bracket Screw (Stainless Steel)
4	080-H113	Release Button Cover
5	080-R010	Release Button Assembly with Cover
6	080-A107SS-50	Roll Pin 1/4" x 1-1/4" for Main Tube (Stainless Steel), 50 pack
	080-A107-50	Roll Pin 1/4" x 1-1/4" for Main Tube (Zinc), 50 pack
7	080-PRDP	Articulating Foot with Power Rod
8	080-R060R	Articulating Foot for Extension Tube End with Roll Pin
9	080-R070	Fixed Foot for Extension Tube End with Roll Pin
10	080-A091-50	Roll Pin 1/8 x 1-1/2 for Foot (Zinc), 50 pack
11	080-R022	End Guide Assembly
12	080-A151	Snap Button (Zinc)
	080-A151SS	Snap Button (Stainless Steel)

SL-10 CARGO BARS AFFECTED

PART NUMBER	END CONFIGURATION	FINISH	STAINLESS STEEL HARDWARE
080-01500	Articulating Feet Both Ends	Mill Finish	-
080-01501	Articulating Foot and Fixed Foot	Mill Finish	-
080-01502	Articulating Feet Both Ends	Mill Finish	✓
080-01503	Articulating Foot and Fixed Foot	Mill Finish	✓

HOOPS AFFECTED

All SL-10 Hoop part numbers now include connection hardware to fit both 1.25" and 1.75" square main tubes. These part numbers include: 080-HP10-UAR and 080-HP10-UAR NS. Part numbers 080-HP10-AR & 080-HP10-AR NS are now obsoleted.

